HiFi ENGINE®

For more Hi-Fi manuals and set-up information
please visit www.hifiengine.com

SERVICE MANUAL

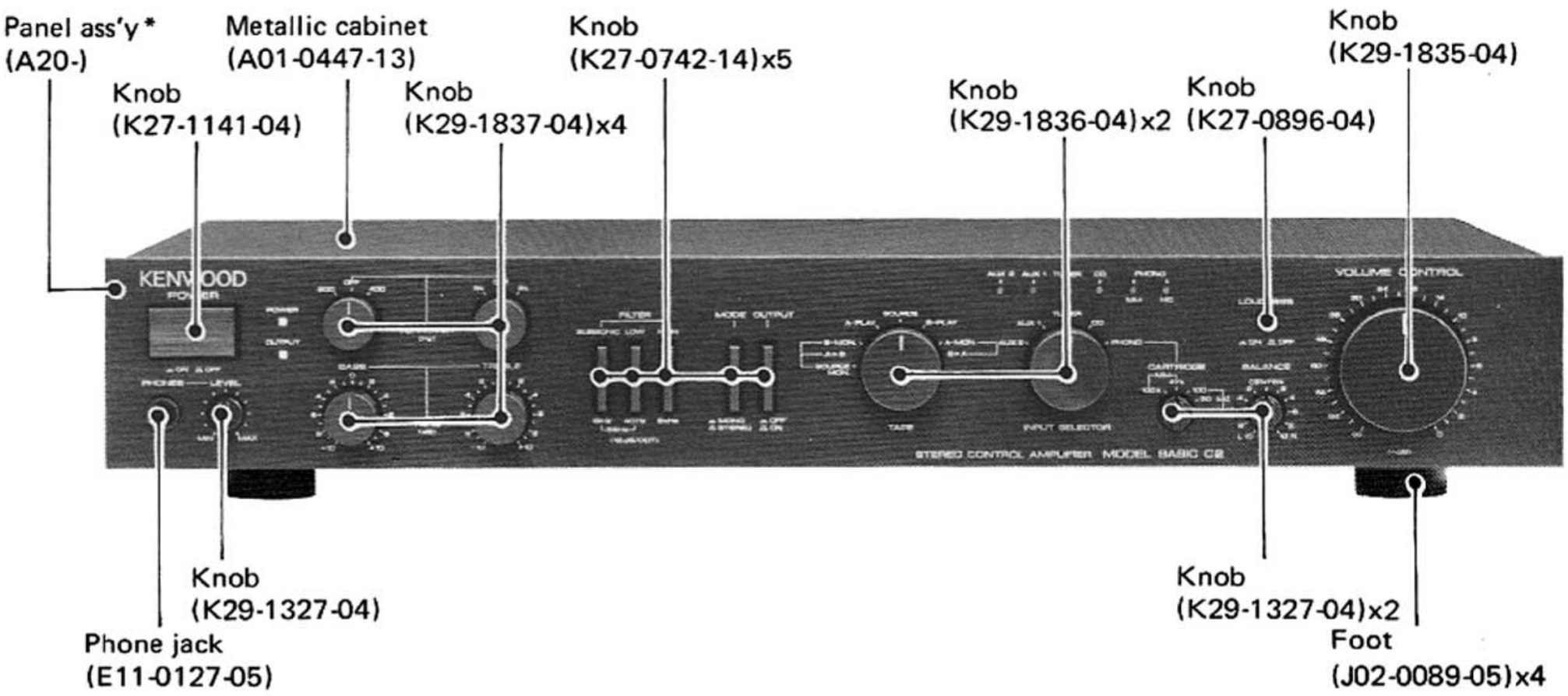

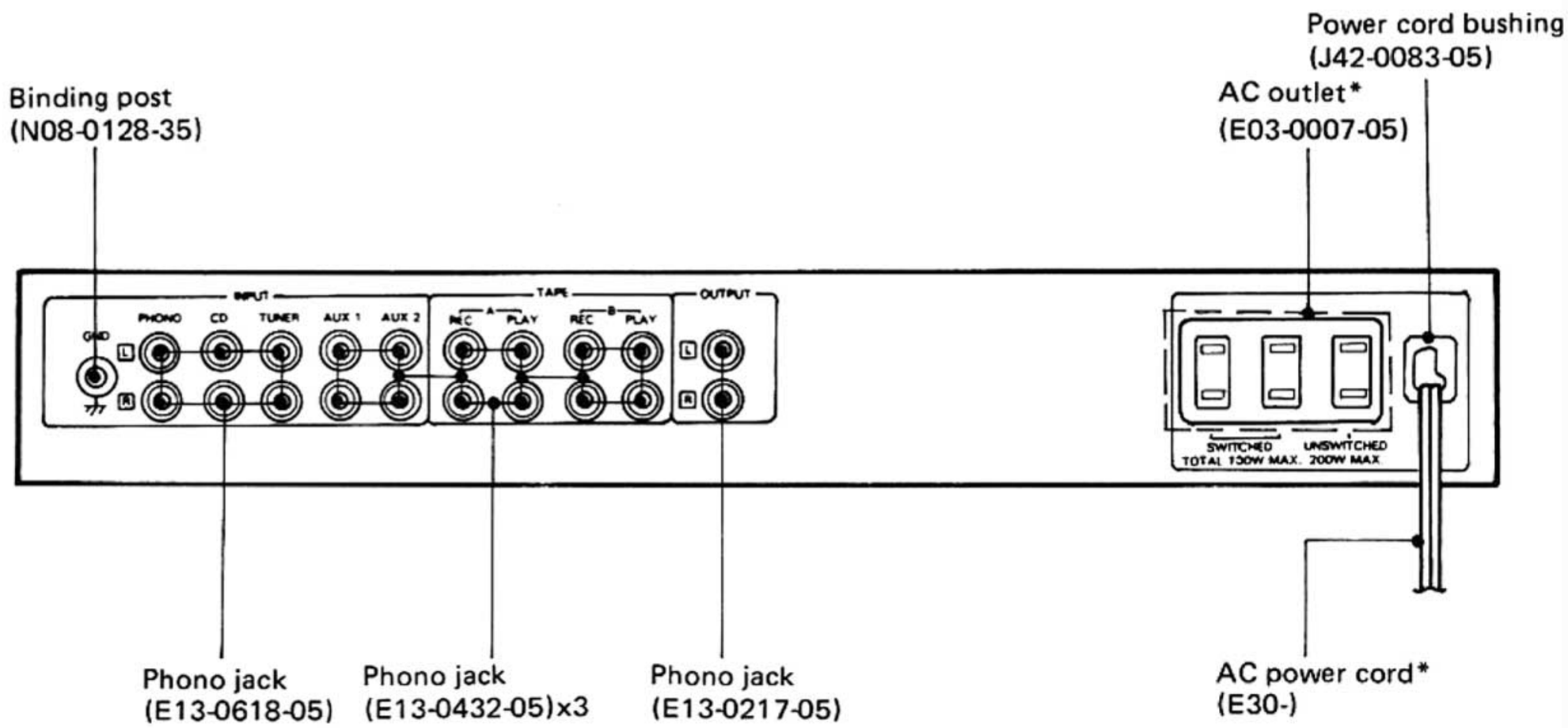

*Refer to Parts list on page 6.

Caution : On EXPLODED VIEW, parts with the exploded numbers larger than 700 are not supplied.

www.hifiengine.com

DISASSEMBLY FOR REPAIR

1. Remove the metallic cabinet (①).
2. Remove 3 screws retaining the panel ass'y from the bottom side (②). Remove 2 screws retaining the chassis and the sub panel (③).
3. Remove 4 screws retaining the pcb to the frame (④) and 3 screws at the rear panel (⑤).
   Now the pcb can be freed from the chassis with the front panel ass'y and the rear panel attached to the pcb.
4. Lift the front panel ass'y side a little and gradually lift the pcb holding the front and the rear panel (⑥).

Note: Be careful not to let the pcb drop before the rim of the chassis when lifting the pcb up.

5. Stand the pcb as shown in the figure so that components can be replaced (⑦).

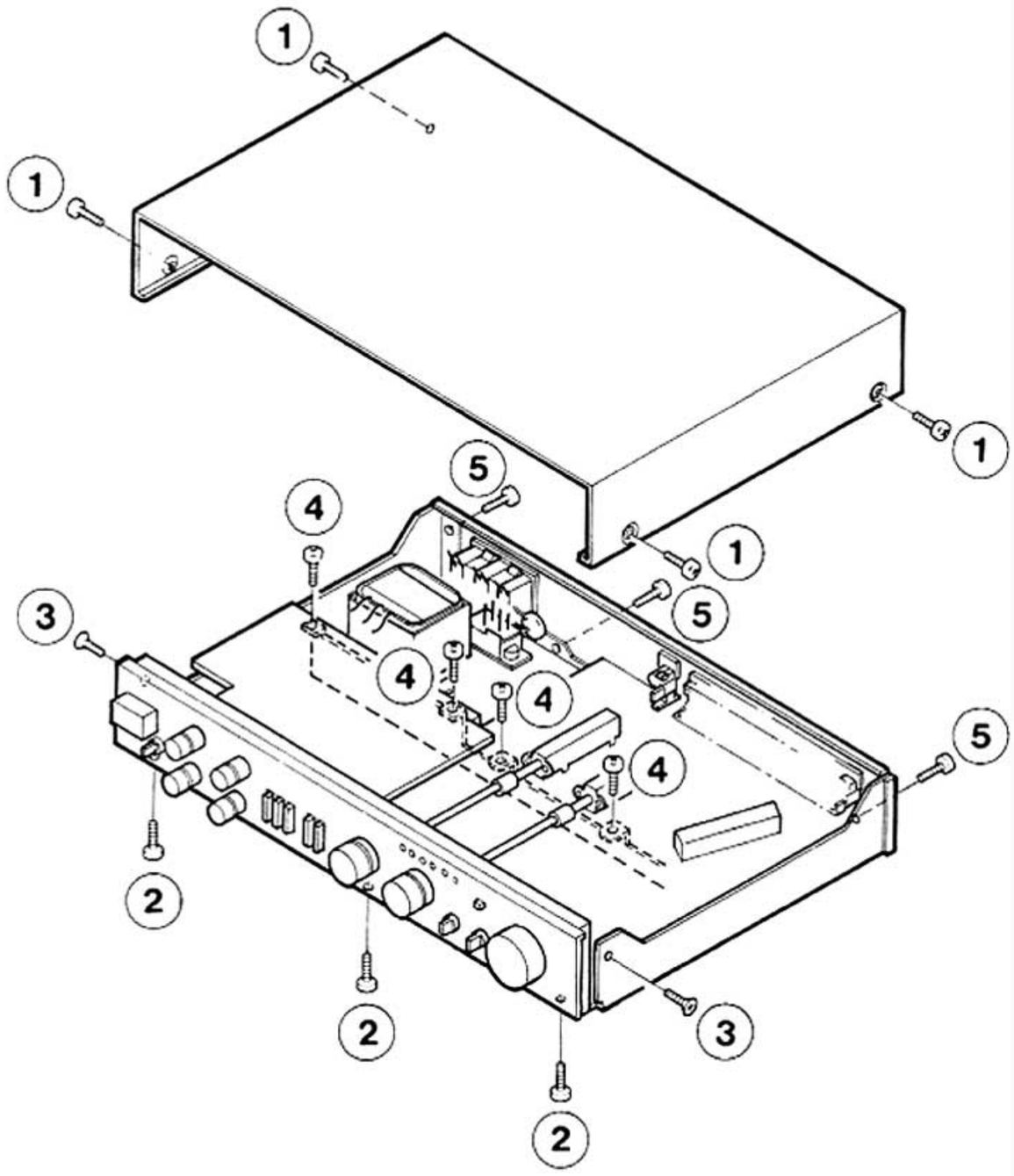

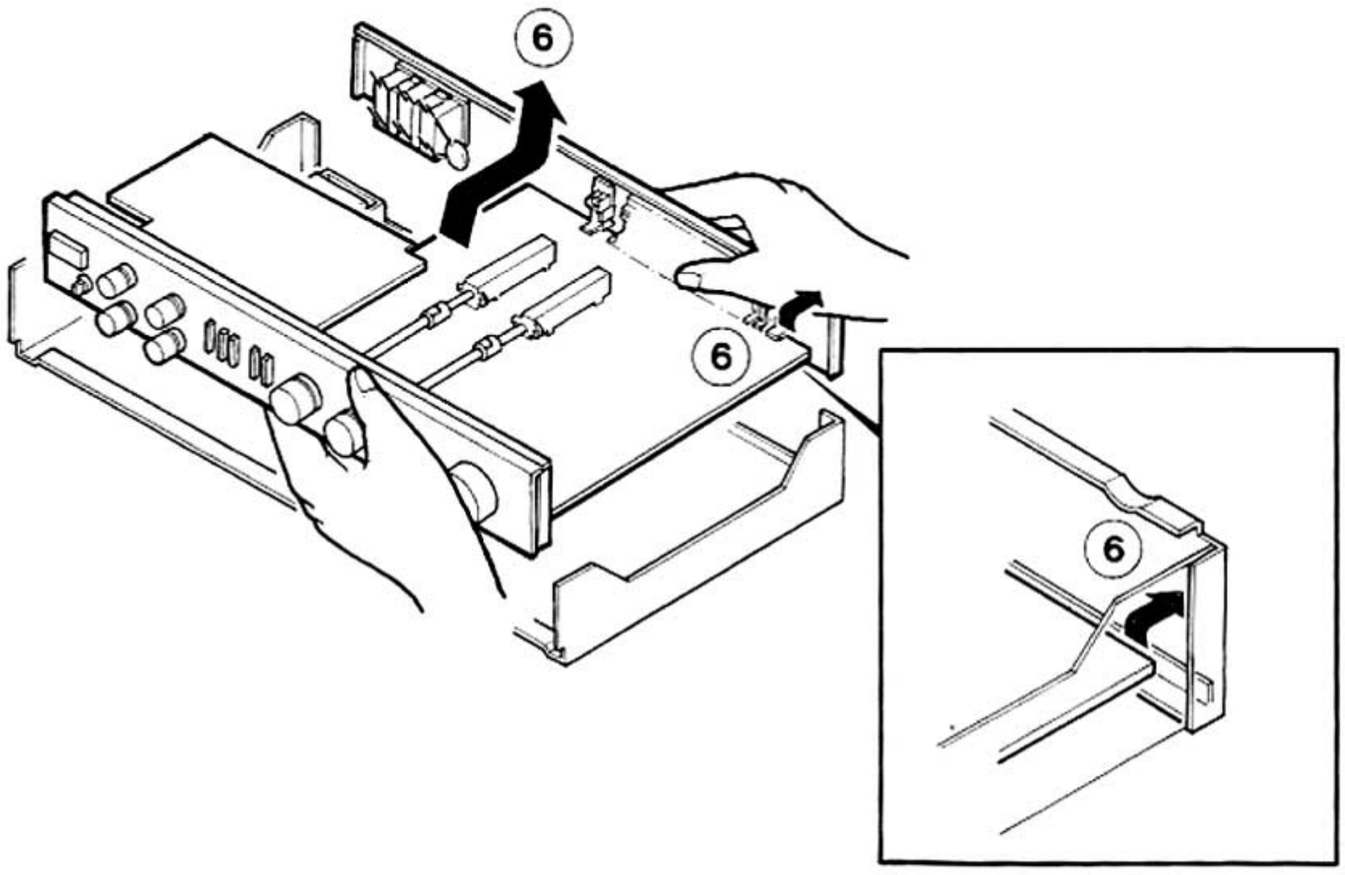

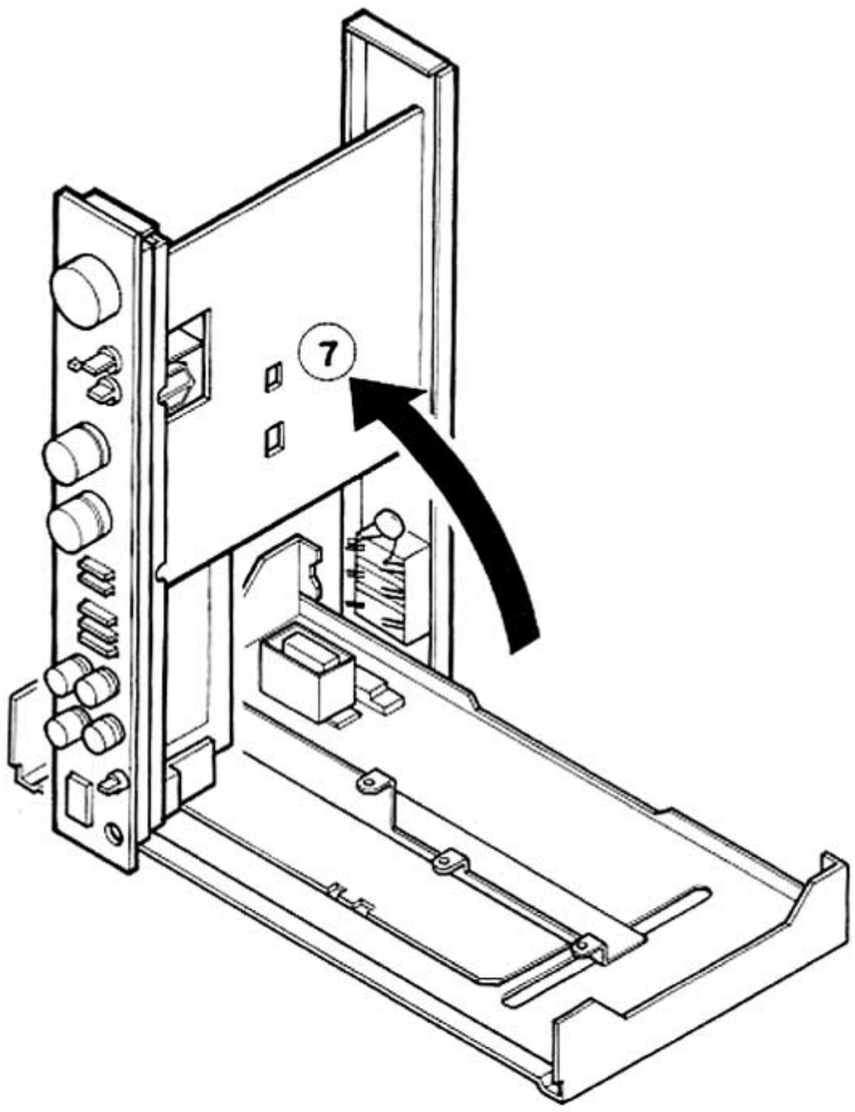

www.hifiengine.com

CIRCUIT DESCRIPTION

AUDIO UNIT (X09-2090-10)

Semiconductor	Application and function	Operation, condition and interchangeability
Q1~Q4	EQ. 1st dif.	1st. differential amplifier
Q5, Q6	Flat amp 1st. dif.	1st. differential amplifier
Q7~Q10	Flat amp cathcade	Cathcade amplifier
Q11~Q14	EQ. cathcade	Cathcade amplifier
Q21~Q24	± Power supply	AVR for EQ. amplifier
Q25~Q28	± Power supply	AVR for Flat amplifier
Q29, Q30	± Power supply	AVR for Relay drive and LED
Q31~Q34	Relay drive circuit	Output muting
IC1	Amp.	EQ. amplifier
IC2	Amp.	Low noise flat amplifier

CONTROL UNIT (X11-2040-10)

Name	Function	Description
IC1	Tone control	
IC2	Filter amp.	High cut, low cut and output buffer amp.
IC3	Headphone amp.	
Q1~Q3	Muting	Headphone muting

PIN CONNECTION AND DIAGRAM

M5218L (IC3)

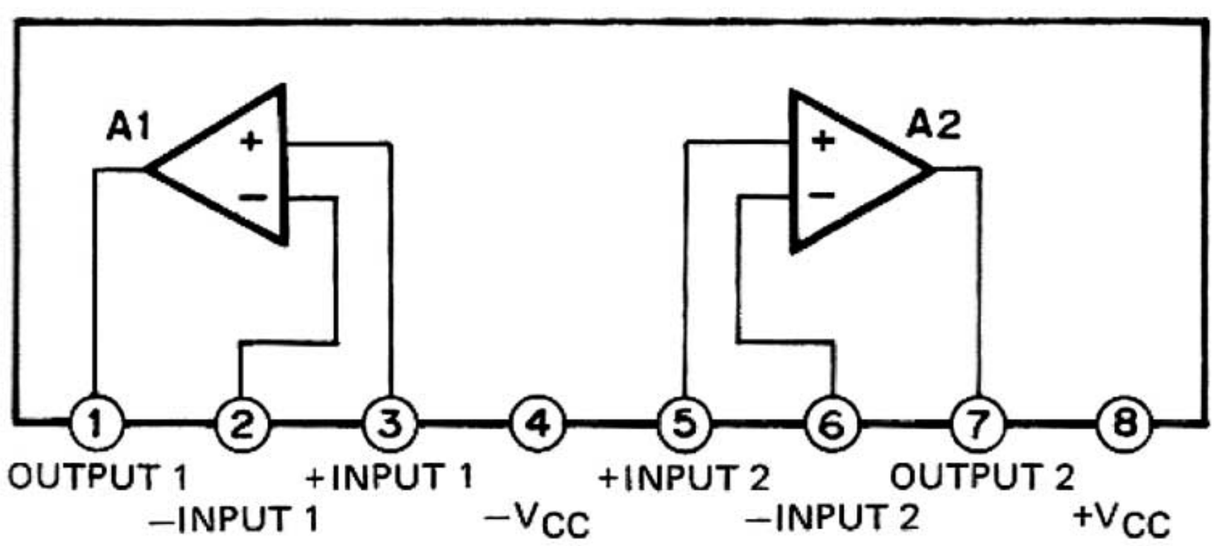

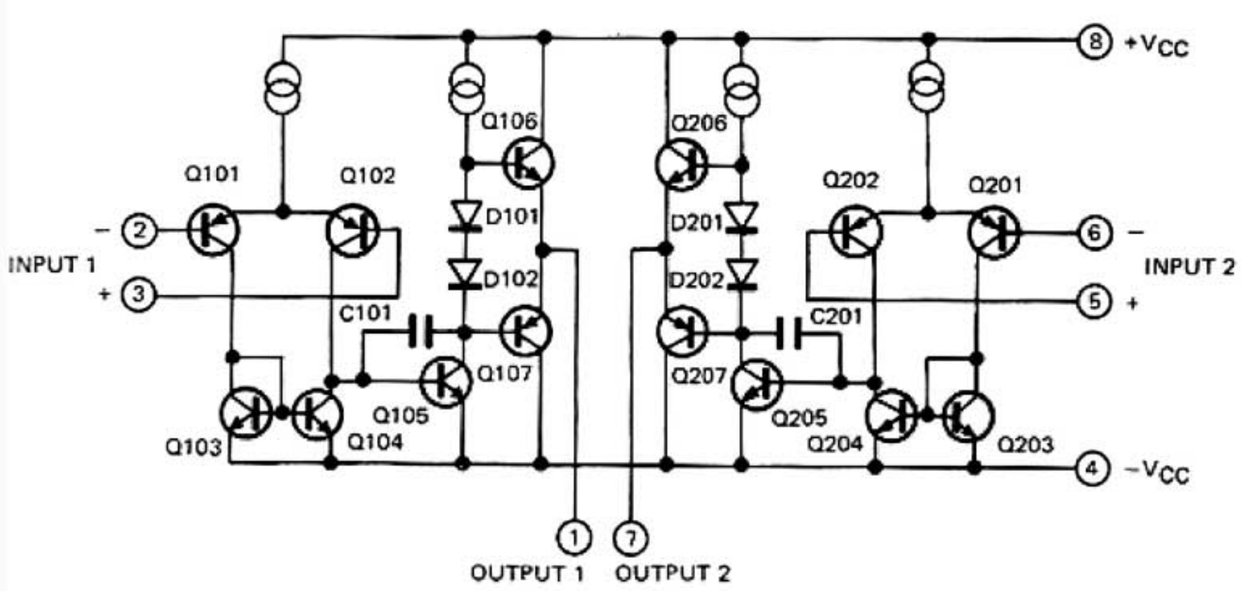

NJM4560D-N (IC1,2)
NJM2041D-D (IC2)

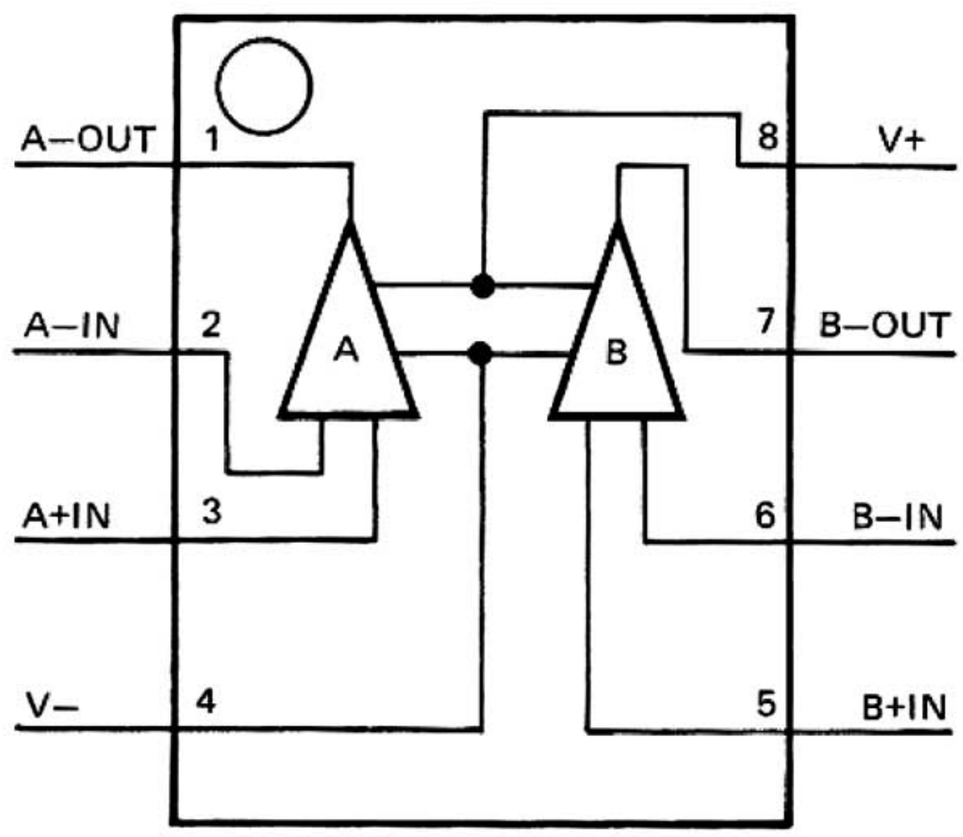

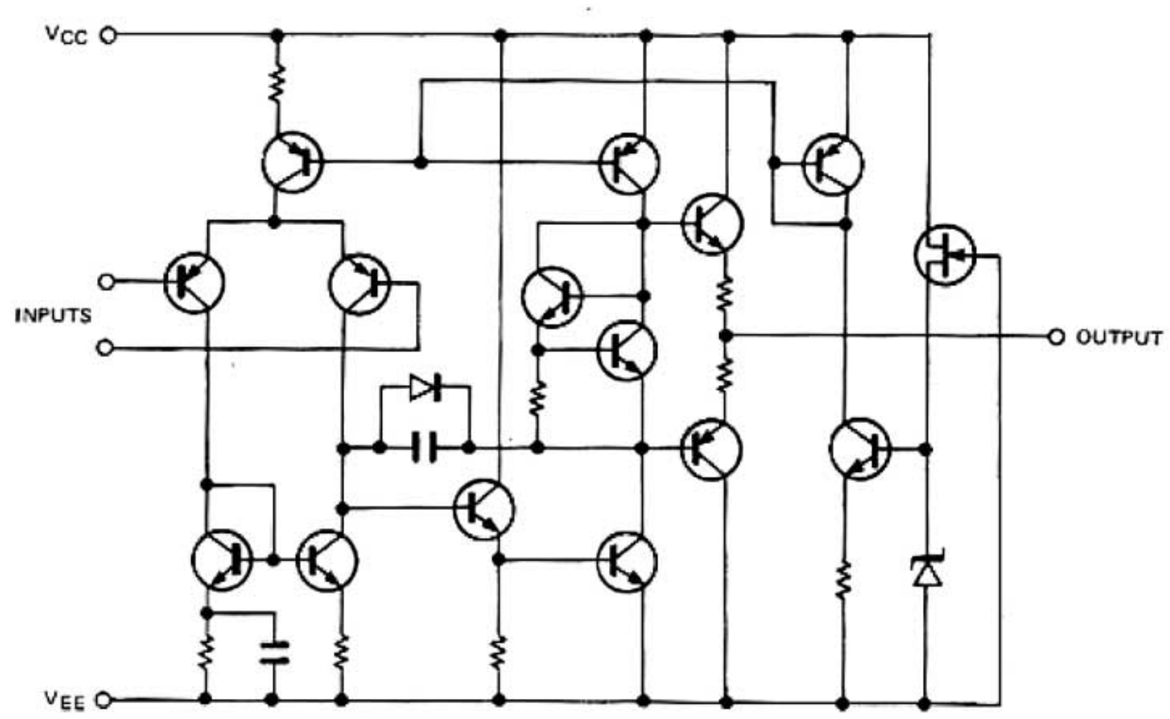

Caution : Some units employed diode E-272 instead of FET (Q23, 24, 27, 28) on X09-2090-10.
If you mount E-272, insert it as shown at right.

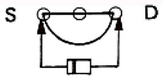

E-272

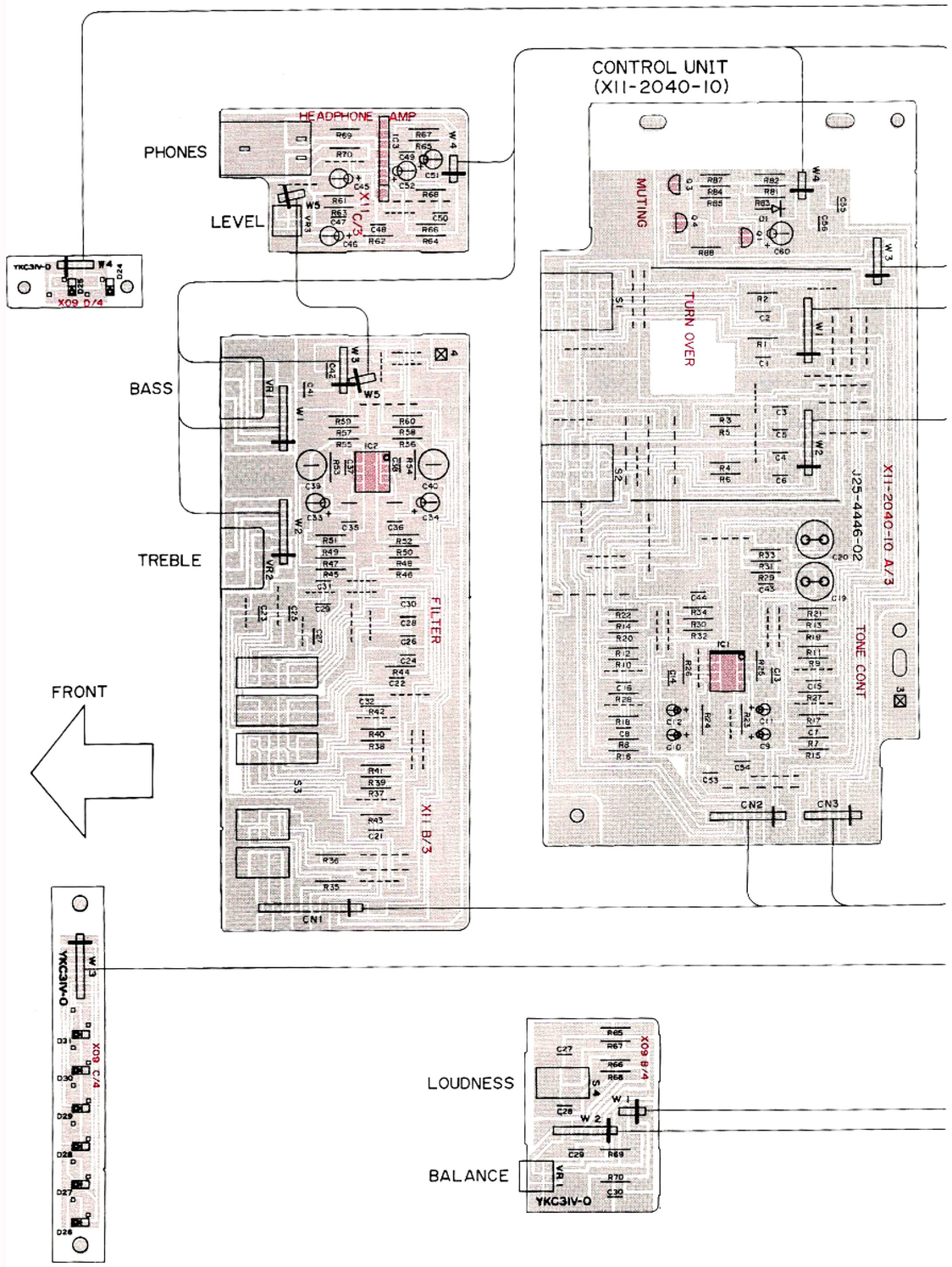

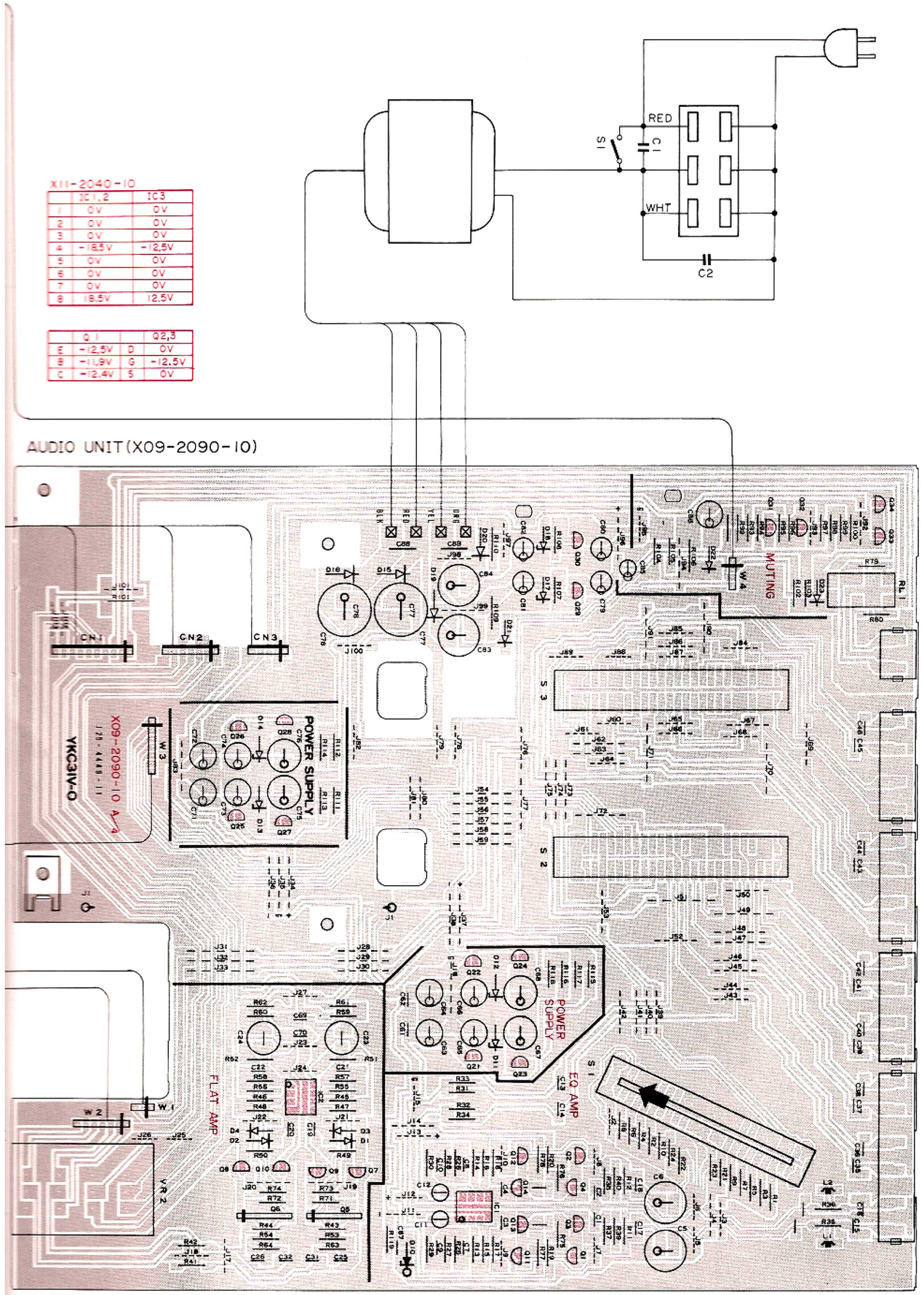

X11-2040-10

	IC1,2	IC3
1	0V	0V
2	0V	0V
3	0V	0V
4	-18.5V	-12.5V
5	0V	0V
6	0V	0V
7	0V	0V
8	18.5V	12.5V

	Q1		Q2,3
E	-12.5V	D	0V
B	-11.9V	G	-12.5V
C	-12.4V	S	0V

X09-2090-10

	IC1	IC2
1	0V	0V
2	7.7V	8V
3	7.7V	8V
4	-18.8V	-18.6V
5	7.7V	8V
6	7.7V	8V
7	0V	0V
8	18.6V	18.6V

	Q1~4	Q5,6
D	4.1V	4.8V
G	0V	0V
S	0.2V	0.7V

	Q7~10	Q11~14	Q21
E	4.8V	4.1V	18.6V
B	5.4V	4.7V	19.4V
C	8V	7.7V	28V

	Q22	Q25	Q26	Q29	Q30	Q31	Q32
E	-18.8V	18.6V	-18.6V	12.2V	-12.5V	2V	2V
B	-14.4V	19.2V	-19.2V	13V	-13V	2.7V	0.5V
C	-28V	28V	-28V	15.5V	-17V	2.1V	9.7V

	Q23	Q24	Q27	Q28
D	25V	-19.4V	25V	-19.2V
G	19.4V	-25V	-19.2V	-25V
S	19.4V	-25V	-19.2V	-25V

	Q33	Q34
E	0.6V	0V
B	1.3V	0.6V
C	0.7V	0.7V

VOL

Refer to the schematic diagram for the values of resistors and capacitors.
The PC board drawing is viewed from the side easy to check.

BASIC C2

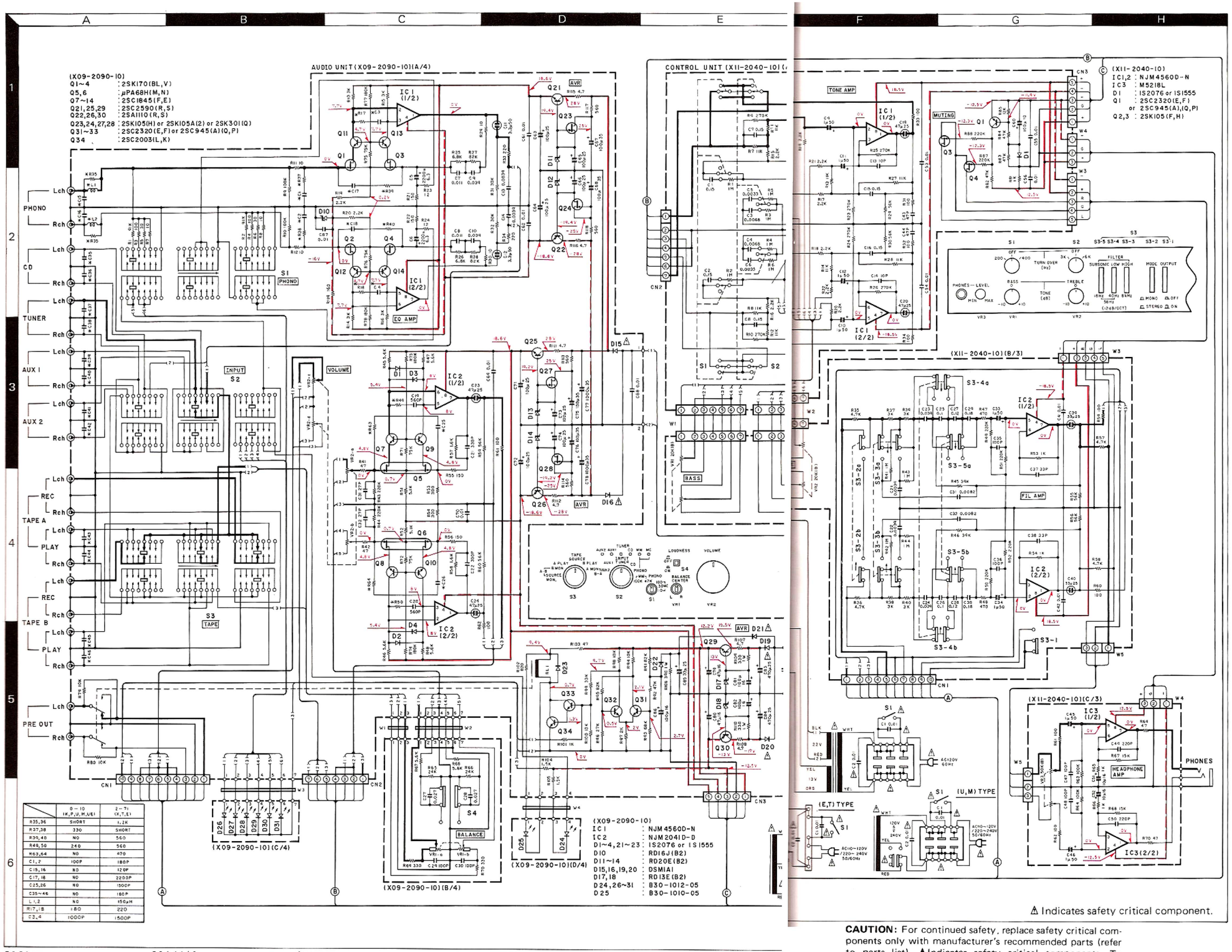

	0 ~ 10 (K,P,U,M,U&E)	2 ~ 7½ (X,T,E)
R35,36	SHORT	1.2K
R37,38	330	SHORT
R39,40	NO	560
R49,50	240	560
R63,64	NO	470
C1,2	100P	180P
C15,16	NO	120P
C17,18	NO	2200P
C25,26	NO	1500P
C35~46	NO	180P
L1,2	NO	150μH
R17,18	180	220
C3,4	1000P	1500P

2SC945
2SC1845
2SC2003
2SC2320

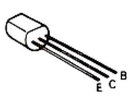

2SA1110
2SC2590

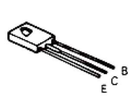

2SK105
2SK105A
2SK170
2SK301

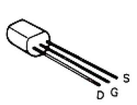

UPA68H

NJM2041D-D
NJM4560D-N

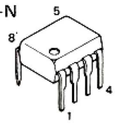

M5218L

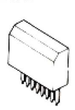

⚠ Indicates safety critical component.

CAUTION: For continued safety, replace safety critical components only with manufacturer's recommended parts (refer to parts list). ⚠Indicates safety critical components. To reduce the risk of electric shock, leakage-current or resistance measurements shall be carried out (exposed parts are acceptably insulated from the supply circuit) before the appliance is returned to the customer.

SPECIFICATIONS

Performance

Input Sensitivity/Impedance/Signal-to-Noise Ratio (IHF A Curve)
- Phono MM ..... 2.5 mV/30 k, 47 k, 100 k ohms/88 dB
- Phono MC ..... 200 μV/100 ohms, 200 ohms/70 dB
- CD, AUX, TUNER, TAPE ..... 150 mV/47 k ohms/110 dB

Signal-to-Noise Ratio Unweighted at 50 mW (DIN)
- Phono MM & MC ..... 73 dB
- CD, AUX, TUNER, TAPE ..... 79 dB

Maximum Input Voltage for Phono MM ..... 200 mV, T.H.D. 0.002%
Maximum Input Voltage for Phono MC ..... 15 mV, T.H.D. 0.002%

Frequency Response
- Phono MM & MC ..... 20 Hz - 20 kHz ±0.3 dB
- CD, AUX, TUNER, TAPE ..... 1 Hz - 350 kHz (−3 dB)

Tone Control
- BASS turnover: 400 Hz ..... 100 Hz ±10 dB
- turnover: 200 Hz ..... 50 Hz ±10 dB
- TREBLE turnover: 3 kHz ..... 10 kHz ±10 dB
- turnover: 6 kHz ..... 20 kHz ±10 dB

Filter
- Subsonic ..... 18 Hz, 12 dB/Octave
- Low ..... 40 Hz, 12 dB/Octave
- Subsonic + Low ..... 58 Hz, 12 dB/Octave
- High ..... 8 kHz, 12 dB/Octave

Transient Response
- Rise Time ..... 1.0 μs

Total Harmonic Distortion
- CD, AUX, TUNER, TAPE
  - 20 Hz – 20 kHz ..... 0.001% at 1 V Output
- Phono MM & MC
  - 20 Hz – 20 kHz 0.002%

Output Voltage & Impedance
- TAPE REC ..... 150 mV, 220 ohms
- PRE OUT ..... 1,000 mV, 100 ohms

Loudness Control
- (at VOLUME −30 dB) ..... 100 Hz, +6 dB
- (at VOLUME −40 dB) ..... 100 Hz, +9 dB

General

Power Requirement ..... 120 V 60 Hz (U.S.A. & Canada models) 220 V 50 Hz (European model) or 120 V/220 (240) V 50/60 Hz switchable

Power Consumption ..... 12 W

AC Outlet ..... 1 Unswitched, 2 Switched (Except European/Australian countries)

Dimensions ..... W 440 mm (17-5/16")
H 78 mm (3-1/16")
D 320 mm (12-19/32")

Weight (Net) ..... 4.5 kg (9.9 lb)

Kenwood follows a policy of continuous advancements in development. For this reason specifications may be changed without notice.

Kenwood poursuit une politique de progrès constants en ce qui doncerne le développement. Pour cette raison, les spécifications sont sujettes à modifications sans préavis.

Kenwood strebt ständige, Verbesserungen in der Entwicklung an. Daher bleiben Änderungen der technischen Daten jederzeit vorbehalten.

- DC voltages are as measured with a high impedance voltmeter with no signal input. Values may vary slightly due to variations between individual instruments or/and units.
- Les tensions c.c. doivent être mesurées avec un voltmètre à haute impédance sans signal d'entrée. Les valeurs peuvent différer légèrement du fait des variations inhérentes aux appareils et aux instruments de mesure individuels.
- Die angegebenen Gleichspannungswerte wurden mit einem hochohmigen. Voltmeter ohne Eingangssignal gemessen. Dabei schwanken die Meßwerte aufgrund von Unterschieden zwischen einzelnen Instrumenten oder Geraten u.U. geringfügig.

BLOCK DIAGRAM

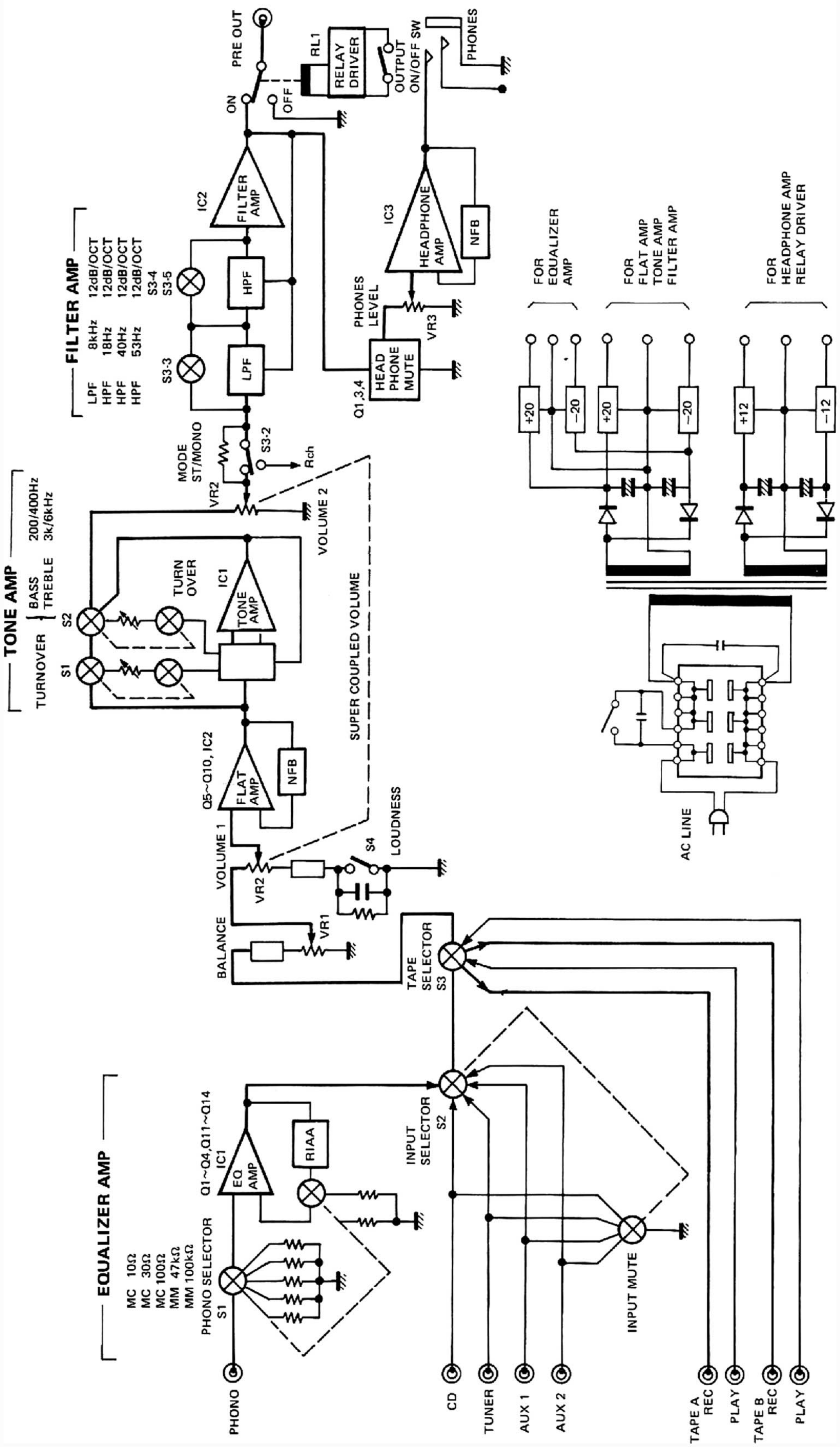

EXPLODED VIEW

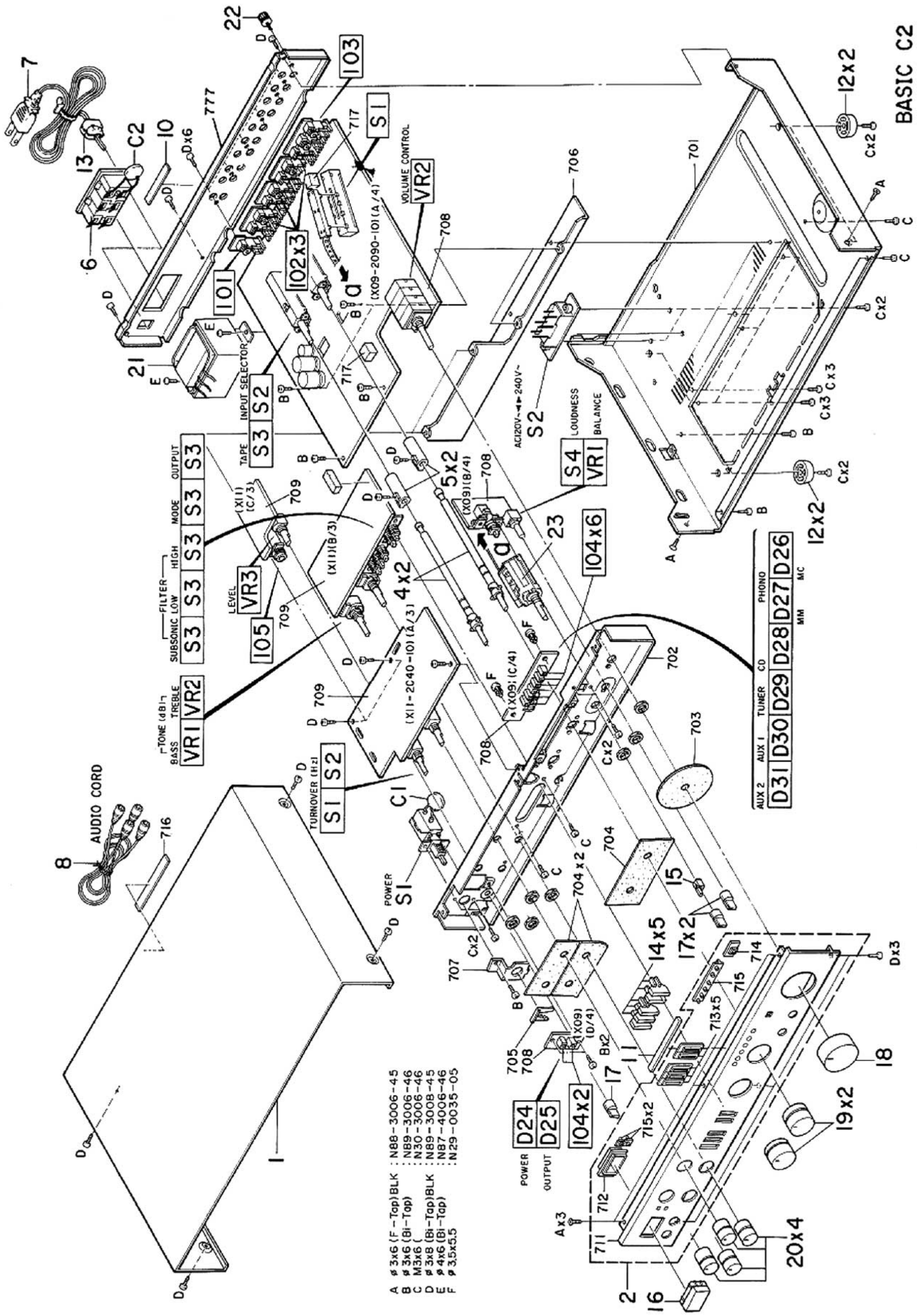

Parts with the exploded numbers larger than 700 are not supplied.

PARTS LIST

✱ New Parts
Parts without **Parts No.** are not supplied.
Les articles non mentionnes dans le **Parts No.** ne sont pas fournis.
Teile ohne **Parts No.** werden nicht geliefert.

Ref. No. 参照番号	Address 位置	New Parts 新	Parts No. 部品番号	Description 部品名／規格	Destination 仕向	Remarks 備考
			BASIC C2			
1	1A		A01-0447-13	METALLIC CABINET		
2	2A	*	A20-4038-02	PANEL ASSY	KPUM	
2	2A	*	A20-4038-02	PANEL ASSY	UEXE	
2	2A	*	A20-4040-02	PANEL ASSY	T	
–			B46-0092-03	WARRANTY CARD	K	
–			B46-0093-03	WARRANTY CARD	P	
–			B46-0094-03	WARRANTY CARD	UUE	
–			B46-0095-03	WARRANTY CARD	UUE	
–			B46-0096-03	WARRANTY CARD	X	
–			B46-0097-03	WARRANTY CARD	T	
–			B46-0098-03	WARRANTY CARD	E	
–		*	B50-5296-00	INSTRUCTION MANUAL(ENGLISH)	KPUM	
–		*	B50-5296-00	INSTRUCTION MANUAL(ENGLISH)	UEXE	
–		*	B50-5297-00	INSTRUCTION MANUAL(FRENCH)	PMXE	
–		*	B50-5298-00	INSTRUCTION MANUAL(SPANISH)	M	
–		*	B50-5299-00	INSTRUCTION MANUAL(ARABIC)	M	
–		*	B50-5300-00	INSTRUCTION MANUAL(ENGLISH)	T	
–		*	B50-5301-00	INSTRUCTION MANUAL(G,D,I)	E	
–			B59-0092-00	SERVICE DIRECTORY	UUE	
⚠ C1	1B		C91-0647-05	CERAMIC 0.01UF P		
4	1B	*	D21-1045-03	EXTENSION SHAFT		
5	1B		D22-0047-04	SHAFT COUPLING		
⚠ 6	1C		E03-0007-05	AC OUTLET	KPUM	
⚠ 6	1C		E03-0007-05	AC OUTLET	UE	
⚠ 7	1C		E30-0181-05	AC POWER CORD	K	
⚠ 7	1C		E30-0459-05	AC POWER CORD	E	
⚠ 7	1C		E30-0587-15	AC POWER CORD	T	
⚠ 7	1C		E30-0712-05	AC POWER CORD	UMUE	
⚠ 7	1C		E30-0780-05	AC POWER CORD	P	
⚠ 7	1C		E30-1341-05	AC POWER CORD	X	
8	1B		E30-0505-05	AUDIO CORD		
10	1C		G11-0128-14	SOFT TAPE		
11	2A		G11-0135-04	SOFT TAPE		
–		*	H01-5218-04	ITEM CARTON CASE	KPUM	
–		*	H01-5218-04	ITEM CARTON CASE	UEXE	
–		*	H01-5219-04	ITEM CARTON CASE	T	
–			H10-1538-13	POLYSTYRENE FOAMED FIXTURE		
–			H25-0078-04	PROTECTION BAG		
–			H25-0216-04	PROTECTION BAG		
12	2B,2C		J02-0089-05	FOOT		
⚠ 13	1C		J42-0083-05	POWER CORD BUSHING		
14	2A		K27-0742-14	KNOB (FILTER)		
15	2B		K27-0896-04	KNOB (LOUDNESS)		
16	2A		K27-1141-04	KNOB (POWER)		
17	2A,2B		K29-1327-04	KNOB (BAL,CART,PHONES)		
18	2A	*	K29-1835-04	KNOB (VOLUME)		

E: Scandinavia & Europe **H**:Audio Club **K**: USA **P**: Canada
S: South Africa **T**: England **U**: PX(Far East, Hawaii)
UE : AAFES(Europe) **X**: Australia **M**: Other Areas

⚠ indicates safety critical components.

www.hifiengine.com

PARTS LIST

* New Parts
Parts without **Parts No.** are not supplied.
Les articles non mentionnes dans le **Parts No.** ne sont pas fournis.
Teile ohne **Parts No.** werden nicht geliefert.

	Ref. No. 参照番号	Address 位置	New Parts 新	Parts No. 部品番号	Description 部品名／規格			Destination 仕向	Remarks 備考
	19	2A	*	K29-1836-04	KNOB (INPUT,TAPE)				
	20	2A	*	K29-1837-04	KNOB (TONE)				
⚠	21	1C		L01-2771-15	POWER TRANSFORMER			K	
⚠	21	1C		L01-2776-05	POWER TRANSFORMER			UMUEX	
⚠	21	1C		L01-2776-05	POWER TRANSFORMER			TE	
⚠	21	1C		L01-2777-05	POWER TRANSFORMER			P	
	22	1C		N08-0128-35	BINDING POST				
	23	2B	*	S90-0077-05	REMOTE SWITCH SHAFT				
⚠	S1	1B		S40-1073-05	PUSH SWITCH				
⚠	S2	2C		S31-2053-05	SLIDE SWITCH (POWER TYPE)			UMUEX	
⚠	S2	2C		S31-2053-05	SLIDE SWITCH (POWER TYPE)			TE	
	AUDIO (X09-2090-10)								
	D24			B30-1012-05	LED				
	D25			B30-1010-05	LED				
	D26 -31			B30-1012-05	LED				
	C1 ,2			CC45FSL1H101J	CERAMIC	100PF	J	KPUM	
	C1 ,2			CC45FSL1H101J	CERAMIC	100PF	J	UE	
	C1 ,2			CC45FSL1H181J	CERAMIC	180PF	J	XTE	
	C3 ,4			CK45FB1H102K	CERAMIC	0.001UF	K		
	C5 ,6			CE04FW0J222MEL	ELECTRO	2200UF	6.3WV		
	C7 ,8			CF92FV1H113J	MF	0.011UF	J		
	C9 ,10			CF92FV1H393J	MF	0.039UF	J		
	C11 ,12			CE04HW1H3R3MEL	NP-ELEC	3.3UF	50WV		
	C13 ,14			CF92FV1H392J	MF	3900PF	J		
	C15 ,16			CC45FSL1H121J	CERAMIC	120PF	J	XTE	
	C17 ,18			CK45FB1H222K	CERAMIC	2200PF	K	XTE	
	C19 ,20			CK45FB1H561K	CERAMIC	560PF	K		
	C21 ,22			CC45FSL1H331J	CERAMIC	330PF	J		
	C23 ,24			CE04HW1E470MEL	NP-ELEC	47UF	25WV		
	C25 ,26			CK45FB1H152K	CERAMIC	1500PF	K	XTE	
	C27 ,28			CF92FV1H273J	MF	0.027UF	J		
	C29 ,30			CC45FSL1H101J	CERAMIC	100PF	J		
	C31 ,32			CC45FSL1H270J	CERAMIC	27PF	J		
	C35 -46			CC45FSL1H181J	CERAMIC	180PF	J	XTE	
	C61 ,62			CF92FV1H103J	MF	0.010UF	J		
	C63 -66			CE04FW1E101MEL	ELECTRO	100UF	25WV		
	C67 ,68			CE04FW1V101MEL	ELECTRO	100UF	35WV		
	C69 ,70			CF92FV1H103J	MF	0.010UF	J		
	C71 -74			CE04FW1E101MEL	ELECTRO	100UF	25WV		
	C75 ,76			CE04FW1V101MEL	ELECTRO	100UF	35WV		
	C77 ,78		*	CE04FW1V102MEL	ELECTRO	1000UF	35WV		
	C79 ,80			CE04FW1C470MEL	ELECTRO	47UF	16WV		
	C81 ,82			CE04FW1C101MEL	ELECTRO	100UF	16WV		
	C83 ,84		*	CE04FW1E471MEL	ELECTRO	470UF	25WV		
	C85			CE04FW1E330MEL	ELECTRO	33UF	25WV		
	C86			CE04FW1C101MEL	ELECTRO	100UF	16WV		
	C87			CF92FV1H103J	MF	0.010UF	J		
	C88 ,89			CK45FE2H103P	CERAMIC	0.010UF	P		
	101	1C		E13-0217-05	PHONO JACK (2P)				
	102	1C		E13-0432-05	PHONO JACK (4P)				
	103	1C		E13-0618-05	PHONO JACK (6P)				
	104	2A,2B		J19-0862-04	LED HOLDER				

E: Scandinavia & Europe **H**:Audio Club **K**: USA **P**: Canada
S: South Africa **T**: England **U**: PX(Far East, Hawaii)
UE : AAFES(Europe) **X**: Australia **M**: Other Areas

⚠ indicates safety critical components.

www.hifiengine.com

PARTS LIST

* New Parts
Parts without **Parts No.** are not supplied.
Les articles non mentionnes dans le **Parts No.** ne sont pas fournis.
Teile ohne **Parts No.** werden nicht geliefert.

Ref. No. 参照番号	Address 位置	New Parts 新	Parts No. 部品番号	Description 部品名／規格	Destination 仕向	Remarks 備考
L1 ,2			L40-1511-43	SMALL FIXED INDUCTOR	XTE	
R103		*	RD14AB2E470JTS	FL-PROOF RD 47 J 1/4W		
R106		*	RS14DB3A391JTE	FL-PROOF RS 390 J 1W		
R107,108			RD14AB2E4R7JTS	FL-PROOF RD 4.7 J 1/4W		
R109,110		*	RS14DB3A331JTE	FL-PROOF RS 330 J 1W		
R111,112			RD14AB2E4R7JTS	FL-PROOF RD 4.7 J 1/4W		
R113,114			RD14AB2E561JTS	FL-PROOF RD 560 J 1/4W		
R115,116			RD14AB2E4R7JTS	FL-PROOF RD 4.7 J 1/4W		
R117,118			RD14AB2E561JTS	FL-PROOF RD 560 J 1/4W		
VR1		*	R10-5017-05	POTENTIOMETER		
VR2		*	R11-9016-05	POTENTIOMETER		
RL1		*	S51-2069-05	MAGNETIC RELAY		
S1		*	S90-0082-05	SLIDE SWITCH		
S2		*	S29-1141-05	ROTARY SLIDE SWITCH		
S3			S29-6010-05	ROTARY SLIDE SWITCH		
S4		*	S40-2331-05	PUSH SWITCH		
D1 -4			1S1555	DIODE		
D1 -4			1S2076	DIODE		
D10			RD16J(B2)	ZENER DIODE		
D11 -14		*	RD20E(B2)	ZENER DIODE		
⚠ D15 ,16			DSM1A1	DIODE		
D17 ,18			RD13E(B2)	ZENER DIODE		
⚠ D19 ,20			DSM1A1	DIODE		
D21 -23			1S1555	DIODE		
D21 -23			1S2076	DIODE		
IC1			NJM4560D-N	IC		
IC2			NJM2041D-D	IC		
Q1 -4			2SK170(BL)	FET		
Q1 -4			2SK170(V)	FET		
Q5 ,6		*	UPA68H(M,N)	DUAL FET		
Q7 -14			2SC1845(F,E)	TRANSISTOR		
Q21			2SC2590(R,S)	TRANSISTOR		
Q22			2SA1110(R,S)	TRANSISTOR		
Q23 ,24			2SK105(H)	FET		
Q23 ,24			2SK105A(2)	FET		
Q23 ,24			2SK301(Q)	FET		
Q25			2SC2590(R,S)	TRANSISTOR		
Q26			2SA1110(R,S)	TRANSISTOR		
Q27 ,28			2SK105(H)	FET		
Q27 ,28			2SK105A(2)	FET		
Q27 ,28			2SK301(Q)	FET		
Q29			2SC2590(R,S)	TRANSISTOR		
Q30			2SA1110(R,S)	TRANSISTOR		
Q31 -33			2SC2320(E,F)	TRANSISTOR		
Q31 -33			2SC945(A)(Q,P)	TRANSISTOR		
Q34			2SC2003(L,K)	TRANSISTOR		
CONTROL (X11-2040-10)						
C1 ,2			CF92FV1H154J	MF 0.15UF J		
C3 ,4			CF92FV1H682J	MF 6800PF J		
C5 ,6			CF92FV1H332J	MF 3300PF J		
C7 ,8			CF92FV1H154J	MF 0.15UF J		
C9 -12			CE04JW1H010M	ELECTRO 1.0UF 50WV		
C13 ,14			CC45FSL1H100D	CERAMIC 10PF D		
C15 ,16			CF92FV1H154J	MF 0.15UF J		

E: Scandinavia & Europe H:Audio Club K: USA P: Canada
S: South Africa T: England U: PX(Far East, Hawaii)
UE : AAFES(Europe) X: Australia M: Other Areas

⚠ indicates safety critical components.

PARTS LIST

⁎ New Parts
Parts without **Parts No.** are not supplied.
Les articles non mentionnes dans le **Parts No.** ne sont pas fournis.
Teile ohne **Parts No.** werden nicht geliefert.

Ref. No. 参照番号	Address 位置	New Parts 新	Parts No. 部品番号	Description 部品名／規格	Destination 仕向	Remarks 備考
C19 ,20			CE04HW1E470MEL	NP-ELEC 47UF 25WV		
C21 ,22			CF92FV1H392J	MF 3900PF J		
C23 ,24			CF92FV1H393J	MF 0.039UF J		
C25 ,26			CF92FV1H104J	MF 0.10UF J		
C27 ,28			CF92FV1H124J	MF 0.12UF J		
C29 ,30			CF92FV1H184J	MF 0.18UF J		
C31 ,32			CF92FV1H822J	MF 8200PF J		
C33 ,34			CE04FW1H010MEL	ELECTRO 1.0UF 50WV		
C35 ,36			CC45FSL1H101J	CERAMIC 100PF J		
C37 ,38			CC45FSL1H330J	CERAMIC 33PF J		
C39 ,40		*	CE04HW1E330MEL	NP-ELEC 33UF 25WV		
C41 ,42			CF92FV1H103J	MF 0.010UF J		
C43 ,44			CC45FSL1H470J	CERAMIC 47PF J		
C45 ,46			CE04FW1H010MEL	ELECTRO 1.0UF 50WV		
C47 ,48			CC45FSL1H101J	CERAMIC 100PF J		
C49 ,50			CC45FSL1H221J	CERAMIC 220PF J		
C51			CE04FW1C100MEL	ELECTRO 10UF 16WV		
C52			CE04FW1C100MEL	ELECTRO 10UF 16WV		
C53 -56			CF92FV1H103J	MF 0.010UF J		
C60			CE04FW1A101MEL	ELECTRO 100UF 10WV		
105	2A		E11-0127-05	PHONE JACK		
R69 ,70		*	RD14GB2E470JTS	FL-PROOF RD 47 J 1/4W		
VR1 ,2		*	R06-3047-05	POTENTIOMETER		
VR3		*	R10-4019-05	POTENTIOMETER		
S1 ,2		*	S29-2030-05	ROTARY SWITCH		
S3		*	S42-5039-05	MULTIPLE PUSH SWITCH		
D1			1S1555	DIODE		
D1			1S2076	DIODE		
IC1 ,2			NJM4560D-N	IC		
IC3			M5218L	IC		
Q1			2SC2320(E,F)	TRANSISTOR		
Q1			2SC945(A)(Q,P)	TRANSISTOR		
Q3 ,4			2SK105(F,H)	FET		

E: Scandinavia & Europe **H**:Audio Club **K**: USA **P**: Canada
S: South Africa **T**: England **U**: PX(Far East, Hawaii)
UE: AAFES(Europe) **X**: Australia **M**: Other Areas

⚠ indicates safety critical components.

WORLD MAP & AREA CORD

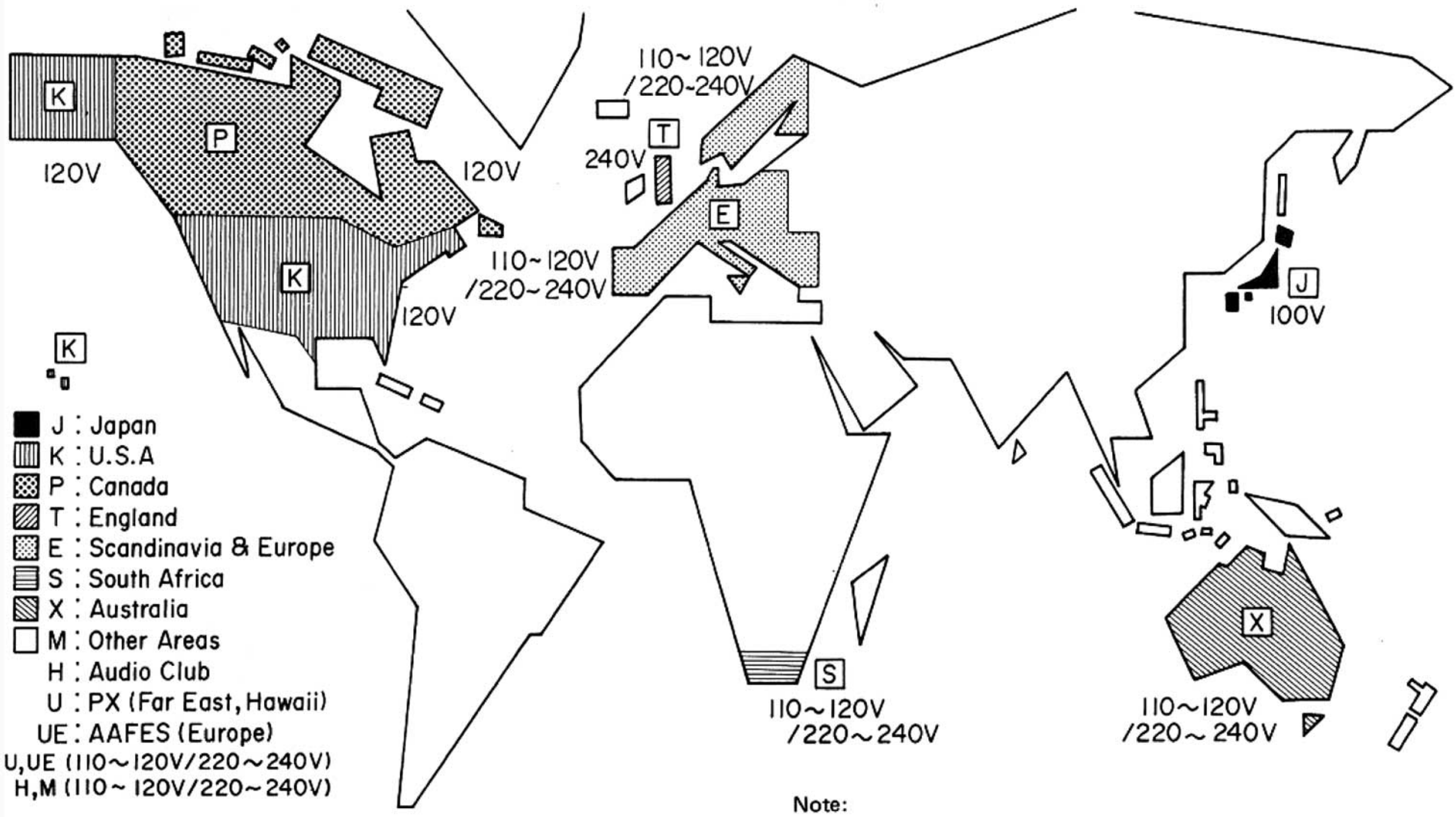

Note:

Component and circuitry are subject to modification to insure best operation under differing local conditions. This manual is based on, the U.S. (K) standard, and provides information on regional circuit modification through use of alternate schematic diagrams, and information on regional component variations through use of parts list.

TRIO-KENWOOD CORPORATION

Shionogi Shibuya Building, 17-5, 2-chome Shibuya, Shibuya-ku, Tokyo 150, Japan

KENWOOD ELECTRONICS
1315 E. Watsoncenter Rd, Carson, California 90745, U.S.A.
75 Seaview Drive, Secaucus, New Jersey 07094, U.S.A.

TRIO-KENWOOD CANADA INC.,
1070 Jayson Court, Mississauga, Ontario, Canada L4W 2V5

TRIO-KENWOOD ELECTRONICS, N.V.
Leuvensesteenweg 504 B-1930 Zaventem, Belgium

TRIO-KENWOOD ELECTRONICS GmbH
Rudolf-Brass-Str. 20, 6056 Heusenstamm, West Germany

TRIO-KENWOOD FRANCE S.A.
5, Boulevard Ney, 75018 Paris, France

TRIO-KENWOOD (AUSTRALIA) PTY. LTD. (INCORPORATED IN N.S.W.)
4E Woodcock Place, Lane Cove, N.S.W. 2066, Australia

KENWOOD & LEE ELECTRONICS, LTD.
Wang Kee Building, 5th Floor, 34-37, Connaught Road, Central, Hong Kong

1984-6 PRINTED IN JAPAN B51-1635-00 (O) 2763

www.hifiengine.com